Weber mod and jetting for the Ducati 906

(Setup, emulsion tube modification, swapping to taller auxiliary venturi, jetting, tuning)

By "Romus" and "Higgy" at http:ducatipaso.org

Last updated 18 February, 2010

Index

Preface ..... page 2

Introduction ..... page 3
- The Innovate LM-1 and LC-1 ..... page 3
- The Weber 44DCNF 116 and its component parts ..... page 4
- Dictionary ..... page 5
- Best Air/Fuel ratio ..... page 5

Emulsion tube and Auxilliary venturi mods and a possible starting point for jetting ..... page 6
- Auxilliary venturi mod ..... page 6
- Emulsion tube mod ..... page 7
- Sample setup for the Weber 44DCNF 116 on the Ducati Paso 906 ..... page 8

Advised tuning procedure ..... page 9

Setup ..... page 11
- Aftermarket air filters ..... page 11
- Air box ..... page 11
- Fuel pressure ..... page 12
- Grose jet & Fuel filter ..... page 13
- Spark plug strength ..... page 14
- Warming manifolds ..... page 14
- Weber DCNF Maintenance kit ..... page 15
- Tuning the idle ..... page 15
- 4.5 Auxilliary venturi, ETs and Jets ..... page 17
- To drill the custom ET F27 ..... page 20
- Jets ..... page 21
- Where to shop ..... page 22

A few more Tips ..... page 23

Useful links ..... page 24

More detail on how the weber works ..... page 25

David Hooau's relay mods ..... page 33

Preface

There have been many attempts over the years to control the Weber DCNF as fitted on Paso's and Sports. Most have had limited success and many ducatisti gave up in frustration swapping the Weber for Dell"Orto's,Mikuni's and Keihin FCRS. A big dollar solution to say the least. A pair of FCR's will set you back US$700 at current prices. What we present to you here is a simple solution for a minimum cost. The most expensive part of the our suggested modifications is a pair of 4.5 Tall auxiliary venturi's. The Tall 4.5's can be hard to find at times and the price can vary from US$60 to US$100 for a pair. I found mine at Fastroadcars in England and Tony has supplied much of the jetting parts for this project. Warwick got his at Pierce Manifolds in California. Hands down the cheapest place to get any Weber parts is Alfa1750's website on E-bay. We provide links to these sellers below. Alfa1750 is easily half the price of everyone else for jets. Some of you will already have a pair of these Tall Auxiliary Venturi's. Those who do can get their Weber working perfectly for about US$50 and a few hours of work. Dyno testing is not the best method. The tuning method we used does not require the seat of the pants method of arriving at the proper jetting either. We used Innovate monitors to check the air fuel ratio on hundreds of trials on two continents to arrive at our conclusions. No expensive and limited value Dyno runs - a Dyno run will be done at some future date for those who believe in such non sense. No track only maximum power runs to beat the clock. In our tests only real time, on the everyday road data as collected by the Innovate LC-1 and LM-1 real time data monitors.
This modification and jetting project has focused on your everyday ride to where ever you need to go. Driving to work in city traffic? Here is your answer. 80 miles of limited access highway? This is what you need. City manors and highway to hell, "get the F*^&^& outta my way" performance, it's here for the taking. Most of us are somewhere in between and that has been our focus. Your everyday ride on your machine doing its best to meet your expectations.
As an added bonus, the sound of the tuned Weber on a Ducati is a fall in love again experience. Even in a group of 300+ Harleys going around Pocono Raceway at speeds in excess of your everyday ride, the Paso with a Weber sound stands out.

> *A Special note on Cam Timing: Recently (Jan, 2010) it has come to light that the as delivered from the factory cam timing is somewhat less than optimal. Errors of up to 6 degrees have been routinely found,mainly differences between front and rear timing. It is these differences between front and rear cam timing that will have the most effect on jetting and the overall performance of the Weber. Popping,backfiring and midrange flatspots all all symptomatic of incorrect timing. The weber can be jetting to compensate for this condition. However, it is suggested to fix your cam timing first, then do the recommended mods here to get the most of your Weber.*

"Higgy" at http:ducatipaso.org

This modification and jetting project also takes into account set-up before tuning and a suggested tuning approach. Setup i.e., spark delivery, airflow and fuel delivery make a big difference on carburettor tuning, as do modifications to the air box - another common modification.

We do not cover ignition timing, cam timing, manifold intake, jetting for the race track, changing pump cams, or changing to a smaller choke/main venturi as likely for the 750.

You might think increasing the Main jet size increases power, because it is delivering more fuel. It is better to think the other way around. It is more important for power that more air is passing through and when it does so, it needs to carry the right amount of fuel - not too much, not too little. To get the air moving there needs to be a controlled vacuum/signal pulling the air fuel mixture through all the circuits of the carburettor.

Carburettors have circuits that work for the different idle and driving situations. The Idle circuit/jet works for idle and in the case of Webers also for the low speed running transition circuit. Then, the main circuit kicks in at about 3,000rpm. On fast acceleration there is also an Acceleration Pump jet that boosts fuel delivery.

Webers are famous for the ability to change all their parts, so they are very versatile for high performance tuning. However, because of this versatility they need tuning to each vehicle, for its set-up and conditions. Copying or partly matching someone else's set-up as a starting point will make jetting easier, but you will have to do some testing and changing of jets yourself.

The problems Paso owners have had with Webers mirror standard Weber characteristics - very rich at the low end and very lean at speed (similar with most cabs). Also the Weber DCNF on the Pasos have a large venturi suitable for high speed and that also explains low speed driving complaints. there is a traditional lean spot on transition with Webers, but we will work that out. We can adapt all these characteristics, solve the lean spot and tune it just right. What we want to do is keep the high speed response but fine tune the low end as well.

Take the effort to tune your Weber and you will be rewarded. In my case, I would say a 50% improvement. In addition my bike has Weber soul.

(Warwick Thorn: "Romus" at http:ducatipaso.org)

Introduction

The Innovate LM-1 and LC-1

The LM-1 and LC-1 are Lambda based air fuel ratio monitors providing real time monitoring of the amount of oxygen in your exhaust system utilizing a wide band style of sensor. Tuning an engine for maximum power previously required long trial-and-error sessions on a dynamometer (Dyno). With the **LM-1**, precise Air Fuel Ration (AFR) measurement allows the user to correctly adjust many variables - including carburettor jetting, fuel injection, turbo fuel curves, etc.- without long and expensive Dyno sessions. The LM-1 and LC-1's digital signal processing technology provides data on exactly how rich or lean an engine is running at any load. The **LM-1's** self-calibrating circuitry also compensates for changes in temperature, altitude, and sensor condition.

The **LM-1 Wideband Controller/Data logger** can sample and store 6 channels of data - air-fuel-ratio and up to 5 other sensor data channels - recorded internally the LM-1 during driving operation for later analysis on a personal computer. At a sampling rate of 12 samples per second it can store up to 44 minutes of data in its memory. The data can be downloaded to a personal computer using a standard serial port and viewed/analysed by the included **Log Works** software or any standard spreadsheet program:

The **Innovate LM-1** also has two analogue outputs to connect to analog gauges, dyno computers, ECUs, piggyback controllers, and other devices with analog inputs. Analog output 1 comes setup from the factory ready for narrowband simulation; analog output 2 is configured as 1 volt = 10 AFR (.6 lambda) and 2 volts = 20 AFR (1.3 lambda). With the provided LM Programmer software these analog outputs may also be configured by the user.

The LC-1 Lambda cable is a complete wideband controller built in to a sealed cable. It features the same digital measurement principal found in the LM-1 & LM-2, and includes digital input, output, and 2 user programmable analog outputs.

The LC-1 is more accurate than older designs and much cheaper. Its self-calibrating circuitry can compensate for changes in temperature, altitude and sensor condition. The LC-1 is ideal for applications such as Dynos, Data Acquisition, Standalone ECUs, piggyback fuel controllers, OBD-II software or chip programmers, and gauges. With the LC-1, you can add additional wideband channels to your LM-1, convert an existing narrow-band gauge, or add wideband capabilities to your Dyno. You can even tune individual cylinders by using multiple LC-1 kits or by swapping the sensor across the rear and front exhaust pipes.

The LC-1

The LM-1

The Weber 44DCNF 116 and its component parts

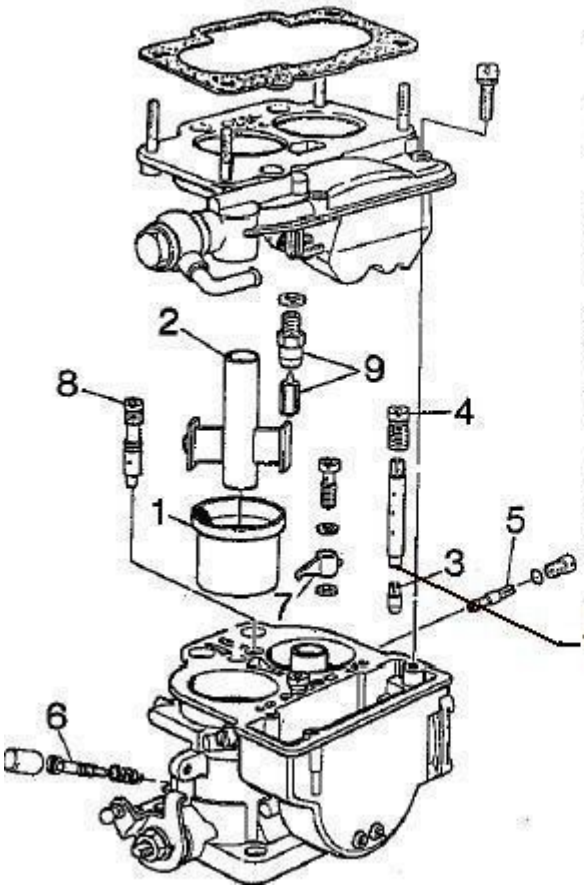

WEBER 44DCNF 116

Ref.	Description	
1	Choke	36
2	Auxiliary Ventury	350
3	Main jet	160
4	Air corrector jet	175
5	Idling jet	65
6	Air idling jet	150
7	Pump jet	40
8	Starting jet	F7/120
9	Needle valve	300
—	Mechanical floating level 1.653 in. 42mm	
10	Emulsion Tube F27	

NOTE for Paso 750 and Sports owners: A 42 or 44 DCNF came with either depending on early or late vintage . The jetting settings in this document should only serve as a guide to what is possible rather than a solution. As for the difference between an F36 and an F21 The F21 is more suited to todays fuels than an F36 would be The F36 has way too many holes of the wrong diameter and the wrong position. The F21 a very good place to start with getting your jetting sorted out.
For the 750 the first thing to do is to find a pair of 34mm chokes if you don't have them installed already. The 44dcnf is too much carb for most 750's 42 dcnf works better but you can have the same function by installing a small choke. So, the first thing to do is figure out which choke you have. You will find the answer stamped in the float bowl side of the carb. You may have to remove the auxiliary venturi to see the stamping but it is there.

Dictionary

AFR: Air Fuel Ratio is a numerical representation of air-fuel mixture - how many parts of air to how many parts of fuel. 14.7:1 is 14.7 parts of air to 1 part of fuel and is called the stoichiometric ideal value. This is the point where all available oxygen is theoretically used in combustion. But 14.7:1 is not the used as the best performance ratio for carbed engines - that is around 12.8:1 - 13.2:1 depending on the engine load.

ET: Emulsion Tube (number 10 in the Weber illustration above): We use a modified F27 emulsion tube (ET). The F27 is the factory standard on the 906 Paso. The emulsion tube's main purpose is to manage the fuel delivery across the speed range. It is also one of the main parts responsible for the transition from the idle to main circuits and can cause stumbles and flat spots. It has been a common misconception that plugging holes at the top of the ET will improve off idle and mid range. In reality blocking these holes leans the mixture further eliminating the ET transitional characteristics. Better to add holes at the lower part of the ET and enhance the ET effect on transition.

Grose Jet: redesigned fuel level control replacing the problematic needle valve.

Auxiliary Venturi (number 2 in the Weber illustration above): It amplifies the main venturi vacuum signal/vacuum. We swap out the standard tall 3.5 for a tall 4.5 auxiliary venturi. this improves the transition from idle to main circuit by improving the ET's performance.

Choke (number 1 in the Weber illustration above): The main venturi on the Weber that is in the Ducati 906. It is 36mm standard. The 750 sports and Paso use 34mm.

AC Jet (number 4 in the Weber illustration above): The Air Corrector (AC) jet is found on the top of the ET and is responsible for modifying the main jet delivery up and down the rpm band.

U-Tube Manometer: A simple water based differential pressure measuring device. Easily made at home.

Best Air/Fuel ratio

So what is the best air/fule ratio? From our own testing and with referecne to the following: http://www.innovatemotorsports.com/forums/showthread.php?t=3134 we have found:

Keeping Idle around 13 Air Fuel Ration (AFR) avoids fouling plugs.

Cruise in the mid 12s AFR is typical Weber, 12.8-13.2 AFR is the sweet spot on the Paso.

Very light loads i.e., on slight acceleration can be lean up to 14 AFR (above that and it bogs for a small time - typical Weber charachteristic).

Temporary drop to 10 AFR on mid to hard acceleration (fuel pump squirt) is fine, but lower than 10 AFR loses power.

From 30% to 60% or 70% load, 12.8-13.2 AFR is the sweet spot.

Auxiliary venturi and Emulsion tube (ET) modifications and a possible starting point for jetting

Auxiliary venturi mod

By increasing the size of the Auxiliary venturi's we have found greater response at low speed. The reason is the increased vacuum signal which increases the response from the emulsion tube (ET). The vacuum/signal draws out the available fuel mix, even on very light acceleration and slow speed. Because the 36 main venturi is suited to higher speeds on the 906 engine, this auxilliary venturi balances the compromise at slow speeds. It also counteracts the negatives pressure waves of the small air box size on the 906. Changing the auxiliary venturi from 3.5 tall to the taller 4.5 provides an immediately noticeable improvement during low speed driving. See the Setup section below for details of how to swap/change them.

For those of you, such as 750 ducatisti, needing to change your Main choke/venturi, removing the Auxiliary Venturi will allow the main venturi to be removed. Carefully remove the staking if found holding the Auxiliary Venturi in place and carefully Tap the Venturi out from the bottom with a wooden dowel working from side to side slowly and evenly away from the central tubular structure.. The auxiliary Ventruri is held in place by a spring clip once any stake marks are removed. Judicious use of carb cleaner will help with carbon and dirt holding either venturi if stuck.

Hint :keep carb cleaner away from plastic,paint and especially your eyes. ***DID I MENTION YOU DON'T WANT TO GET CARB CLEANER IN YOUR EYES?***

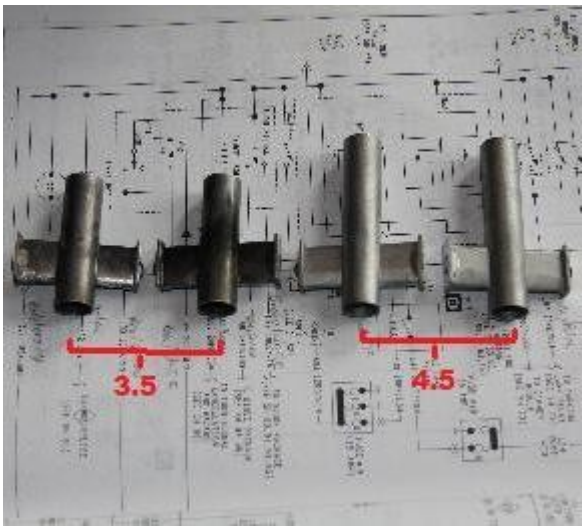

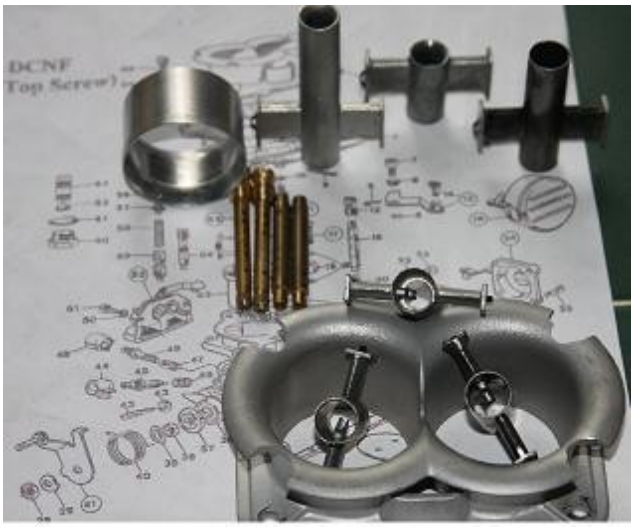

Emulsion tube mod

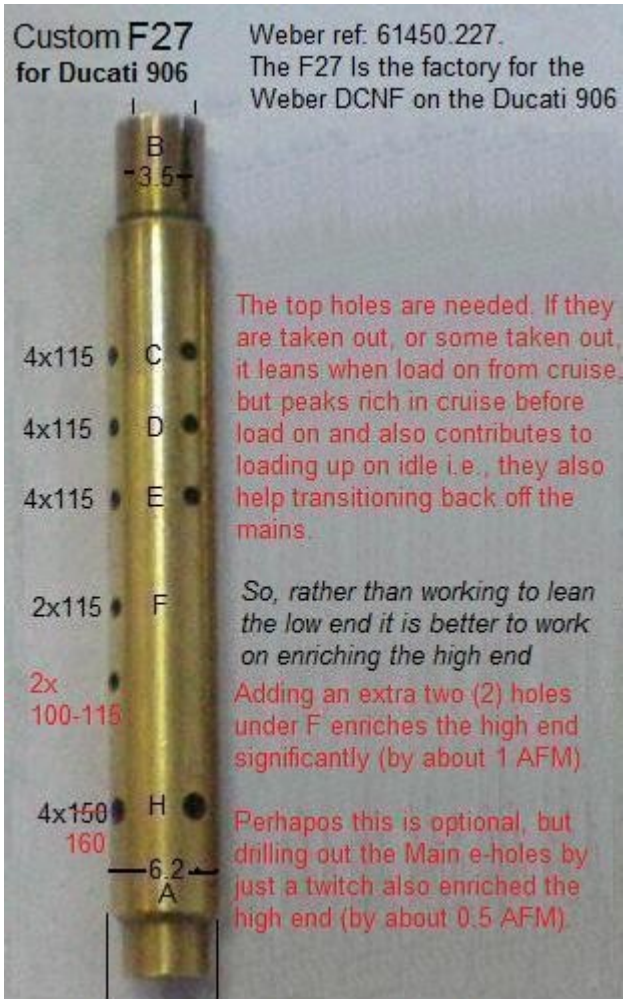

(See the Setup section below for how to drill and install this ET mod.)

Sample setup for the Weber 44DCNF 116 on the Ducati Paso 906

"Higgy" at http:ducatipaso.org	*Factory settings*	*"Romus" at http:ducatipaso.org*
Choke: 36mm **Auxiliary venturi:** 4.5 **Main jets:** 190 **AC jets:** 150	**Choke:** 36mm **Auxiliary venturi:** 3.5 **Main jets:** 160 **AC jets:** 175	**Chole:** 36mm **Auxiliary venturi:** 4.5 **Main jets:** left/rear 185, right/front 180 **AC jets:** left/rear 185, right/front 190
ET: F27 modified **Idle jets:** 65 **Pump jet:** 40 **Fuel pressure:** Unregulated	**ET:** F27 **Idle jets:** 65 **Pump jet:** 40 **Fuel pressure:** 1.8psi	**ET:** custom F27 **Idle jets:** 60 **Pump jet:** 35 **Fuel pressure:** 3psi using Holley
Float bowl valve: Gross Jet	**Float bowl valve:** Needle valve	**Float bowl valve:** Gross Jet
Float level: 42 LM-1 oxygen sensor measuring both front and rear	**Float level:** 42	**Float level:** 42 *LC-1* oxygen sensor measuring both front and rear *Note: The need for the difference between the front and rear cylinder jetting is likely due to cam timing issues.*
Idle speed screw: **left/rear idle mix screw:** 1.5 turns **right/front idle mix screw:** 1.5 turns		**Idle speed screw:** in just over half a turn **left/rear idle mix screw:** out 1 3/4 turns **right/front idle mix screw:** out 1 turns. *Note: Difference between idle mix is because rearis richer and I have smaller idle jets, so my difference is greate rthan Higgy.*
Air bleed: ¼ turn right side		**Air bleed:** 1/16 turn left side
Air box: modified,open two inches across the top and tubes removed at bottom		**Air box:** Closed. One inlet pipe from behind radiator. K&N filter.
Exhaust: *RennSports* **Fuel:**		**Exhaust:** Tergminoni **Fuel:** 95 Octane (Australia). **Other:** Engine vented to atmosphere
Climate: Humid Continental Zone Mean Elevation 1100 feet-0 to 3200Ft(0 to 975m) Mean Temperature of 54°F (12°C) Record low –42°F (–41°C), Record high 111°F (44°C) 42 in (107 cm) of precipitation annually		***Climate:*** *Mild to hot sea level: Brisbane, Austrlia.*

*NOTE: **Fuel Octane ratings** The US uses a different rating system than the rest of the world. There is no difference in Octane,just the numbers.*

USA (PON)	Europe (RON)
87	91
89	93
91	95
93	98

Advised tuning procedure

1. Decide on your setup, calculate variations in AFR and go shopping, while you work on setup aspects. Setup means air box, air filters, fuel pressure etc. See the section "SETUP" below.

If you have made the two mods suggested (4.5 aux venturi and custom F27 ET), and have a similar setup, you could use the sample jetting above as a starting point.

But, If you have an open airbox, of any configuration, go down three AC steps. And if you are 2,000 - 3,000 feet above sea level, drop idle and main jets down one step.

Needs to buy some parts? Go ahead and track down some 4.5 aux venturis, some mini drill bits, the jets you think will work and one main either side and three AC jets either side. Don't forget the smaller idle jets and a smaller Accelerator pump jet.

Review the setup section below and work on those parts you want to.

2. Write down your present settings i.e. turns out of the Air bleed screws, idle mixture screws and Idle speed screw. If you make a mess of adjustments, you can always go back to your original settings.

3. Tune the idle. See the section "Tuning the Idle" below.

The idle is independent from the other jets as long as you don't rev it hard (revving it hard adds petrol from the Accelerator jet). You tune the idle jet first because when you ride the idle jet affects the early transition to the main to the main circuit.But actually the main jets do have a small effect on idle, so at the end you will retune the idle.

4. Put in the suggested parts (4.5 aux venturi, ETs and jets, Grose jet). See the section "4.5 Auxiliary venturi, ETs and Jets, Grose jets & fuel filter" below.

This is also the time to put in a Holley fuel regulator and some of the parts from a carb maintenance kit, if you have one.

5. Test ride to become sensitive to the new arrangement.

5. Try changing the main jets up one size (richer) and keep them if better* - if not, try a main jet down one (leaner) and keep them if better*. Your air box setup or altitude difference could easily require a jet step up or down.

* *What is better? Better is taking out any hesitations, missing, spluttering on engine acceleration or engine braking. Best is noticing increasing response on acceleration. Best is when the bike gets a lighter feel, which is due to the combination of response and power. Noisier is not better and can mean too rich. There is a sweet spot. See if you can find it.*

6. Change the AC jet down (richer) and keep them if better* - if not, try an AC jet up (leaner) and keep them if better".

Note: 1 step up main jet = 3 steps down AC jet. A larger air jet has a bigger number on it and will make the engine run leaner if it is all you change. A smaller air jet has a smaller number on it and will make the engine run richer if it is all you change

7. Test enriching the left/rear cylinder a bit. First try and taking turn out the left/rea idle screw and see if it is better.

> *TIP: Each 1/16 turn of the idle mixture screws will change the AFR about 0.5. SO make adjustment turns of 1/32 when you get close.*

Bear in mind that each .5 AFR is what you get if you increase 1 main jet or decrease 3 steps of ACs. That is an indication on how far you might test enriching the jetting.

8. If you are NOT installing a Grose jet and you have a lean spot on very light acceleration at about 3-4k rpm (which you will feel as a slight bogging of power on very light acceleration on the motorway), a solution is to a) increase your float level from 42cm to 40 (measured from the top, so smaller measurement increase float bowl level) , and b) go up a Main and AC set*. A "set" means* *<u>one Main jet up and three AC jets up at the same time</u>. This keeps the same AFR but increases the volume/amount, which in turn brings the main in just that little bit earlier to cover the lean spot. Moving up a set won't change the AFR, but the volume will increase and bring in the main a little earlier. Volume capacity depends on air flow through the motor, so if you can move enough air through then you can increase a set and gain the power advantage of doing so:*

An examples of moving up or down sets,

					Main jet: 190 AC jets: 220
				Main jet: 185 AC jet: 205	
			Main jet: 180 *AC jet: 190*		
		Main jet: 175 *AC jet: 175*			
	Main jets: 170 AC jets: 160				
Main jets: 165 AC jets: 145					

NOTE: This is only recommended once you have your jetting pretty well right, so you would only be going up one or two steps at the most.

9**. Re-tune the idle, using a manometer to also tune to balance carb air flow.**

Enjoy.

SETUP

(air filters, air box, fuel pressure, Gross jet & fuel filter, spark plug strength, warming manifolds, Weber Maintenance kit)

Aftermarket air filters

Many Paso owners already have aftermarket air filters. Commonly **after market air filters** are added. The most common is the K&N Filter DU-0900 bought through any K&N dealer. Another is the ITG WB-365 filter from Bike air (http://www.itgairfilters.com/bikeair.asp?section=bikeair&BikeMake=DUCATI). This change along with aftermarket exhaust is common on Paso's. The idea is to decrease restriction to air flow.

Air box

A polular mod on the Paso has been to open holes in the airboix lid. If you have a closed air box and want to make changes with an open air box lid, it is better you do it before you start tuning your carb, because an open air box of any variation is about 0.5 AFR richer. This is the only point to be made as the Innivate sensors do not provide data about suitability of different air box setups.

However, we can discuss the reason for holes in the airbox. It seems this helps low end carb perforamce, where there has traditionally been issues. The 0.5 richer difference with holes in the lid (regardless of the size) indicates better air intake with the lid holes (probably because it improves the vacuum in the venturi).

Some of the mods in this document (the Aux venturi and gross jet mods) also adress the low end performance and so it may not be such a beneficial solution to have holes in the lid, when that costs you by increased noise and perhaps loss of efficiency at speed if in fact there is any kind of vacuum build up - after all, air box intakes usually face the front to draw in the aif flow. I tried to prove this with a manameter taped inside the airbox, but it wasn't sensitive enough - would be a good thing to test with sensitive air pressure and air speed devices.

I have leaned towards a closed air box with one plenum pipe, made to reach forward to behind the radiator. This has been a discussion but not presented as any result of our innovate sensor air fule ratio testing - the only main poiint being to accunt for the 0.5 AFR richer when a lid is open in some way. "Romus" at http:ducatipaso.org

Fuel pressure

The factory fuel pressure settings works okay, but if you are going to bring the pressure up from its ~1.8psi to the recommended Ducati 3psi, it is better you do it before you start tuning your carb, because the fuel pressure affects the air fuel ratio.

On testing the Weber fuel pressure regulator at the carb it is found to be at 1.5 – 1.8 psi. This seems to be fine on the Paso 906. The 906 tank return line is different from the 750. The 750 had over 3.5psi pressure and needed a fuel pressure regulator.

On the 906, which is a bigger motor, needing more fuel, the only reason to add a fuel pressure regulator is to bring the pressure up closer to the Ducati 3psi standard - perhaps ensuring even fuel delivery at high speed and to turn the pulsing from the electric pump into flow, which Webers prefer.

Although you can bring the pressure up by restricting the return line (e.g., by using 3/16th return fuel line and poking a 170 main jet into the line at the tank end for ~3psi) using the Holley 12-804 is the best method as it will even out the flow.

http://www.holley.com/12-804.asp
http://www.holley.com/data/Products/Technical/199R7914-3.pdf

Instruction:
1. Rather than using a mini tank, I found it more accurate to use the tank because the pressure is different. You can do this by putting on lengthened fuel line and return line and then sitting the tank back rested on a some wood.

2. To attach the Holley you will need to take the air box off and maybe the Weber, so you can get at it. The attachment instructions come with the Fuel regulator.

3. Attach the Holley with a fuel guage between it and the carb. Allow fuel to flow through the fuel line with the key on until overflowing at the carb connection end, then turn the switch off and connect the fuel line at the carb, close the fuel tank cap (this gets rid of any air). Now start the bike and adjust the fuel pressure to approximately 3psi.

   You will need a fuel pressure guage connected to fuel line that you can swap with the line from the Holley output and the Weber inlet. The guage is screwed into a Tee inline. Once you are happy with the pressure reading, this would be removed for fuel line only.

I tested AFR differences with variations of fuel pressure and it changes it a lot e.g., if you squeeze the fuel pipe with your hand with the bike running I saw the AFR reading lean by 1-2AFR. So clearly if you are going to change the fuel pressure, do it before you do the jetting. *"Romus" at http:ducatipaso.org*

Grose jet & Fuel filter

The Grose jet is a replacement modification for the Needle valve (Number 9 in the Weber picture on page 5). The design, which uses a balbearing instead of a cone shape as the shut-off seal.

The design is more efficient for refilling the float bowl and so, through the delivery process, provides better driving response on acceleration. This means driving off from a stop will be smoother and also the characteristic lean spot on first acceleration (before the fuel pump kicks in) is solved.

A problem that could occur with the Grose jet in our DCNF on the 906 is if small particles get caught in it. Therefore, when installing a Grose jet we should be adding, if we don't already have one, an in-line fuel filter before the carb fuel intake - something also recommended in the Holley Fuel regulator instalation instructions.

To get to the factory Needle Valve out, the float first needs to be removed. You can do this by pushing the pin out with a small Allen Key.

Then you can remove the factory Needle Valve and replace it with the Grose Jet.

When you reinstall the float make sure you set the float level. It should be 42mm from the gasket to the bottom of the float. This works like a toilet cistern and is adjusted by bending the metal tag that the ballbearing touches against. It should just touch it when the bottom of the float is 42mm from the top of the carb lid with its gaslet in place. Because the Grose jet bottom ballbearing in bigger than the standard one, you will need to bend up the metal tag a bit.

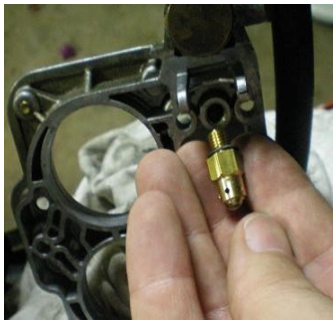

If your float bowl level was increased, by reduce the setting to lower than 42 e.g., 40, you can reset it to 42. Increasing the float level may have been done to overcome the Weber lean spot on light acceleration, but the Grose Jet will take care of that now.

Spark plug strength

This won't affect the tuning, but will improve the spark plug firing. If you do these mods you can do it before or after tuning your carb.

For a noticeable improvement to spark plug firing you can add a relay to get a more direct 12 volt feed to the Coils. See “Main Feed relay" in the last section "***David Hooau's relay".***

For further noticeable improvement to spark plug firing you can also change the coils for Japanese ones with 3 to 5ohms resistance. You could get some from the wreckers and ask them to check they are 3 ohms with multimeter. If the leads are different you may need to change the lead fittings. You might get an engineering shop to make up some adapted brackets, like the factory ones, for the coils.

Another common option is to replace the factory coils with dc3-1's from dynatek
http://www.dynaonline.com/skins/products/accessories/Dyna_Coils/

Warming manifolds

Warming manifolds for cold weather running is another area that could be added here.

Weber DCNF Maintenance kit

It is not a bad idea to change a few gaskets and the Needle Valve since you will be opening up the carb

I ordered a maintenance kit (Weber 40-42-44 DCNF Carburettor Kit) in my case from MLP Carburettors - http://stores.shop.ebay.com.au/MLP-Carburettors__W0QQ_armrsZ1.

Trimming the new gasket so it fits just right between the carb and the manifolds helps with airflow.

Tuning the idle

Use an LM-2 or LC-1 from http://www.innovatemotorsports.com/ if you want to have accurate reading. In that case the instructions are provided. You will need to attach some wiring and have one or two bungs welded into your exhaust pipe.

You can hook it to a digital gauge and get live readings of your AFR:

To tune the idle manually, see;
http://www.piercemanifolds.com/Carburetor_Set_Up_and_Lean_Best_Idle_Adjustment.htm

You should also use a Manometer to balance the air flow of the two venturis. One of them will flow less air than the other due to small physical differences. So you only need to adjust one of the two air screws. Since they add air you only need to add air to the high vacuum side to match the lower vacuum side, whether that is the screw for the vertical or horizontal cylinder really isn't the issue. You want them to match as closely as you can get them. To do this you need a U-tube manometer, which is easy to make at home out of some of clear tubing and some colored water and something to attach the tubing to.
"ducapaso" at *http:ducatipaso.org has posted instruction on making a homemade* manometer such as described on the forum as the subject "My handwork for vacuum balancing " in the 750 Paso Technical FAQ Digest.

To sync your carbs is easy, all you need is about 6 feet of clear 6mm or 1/4inch tubing some colored water and a board (or plastic or cardboard) to mount it on. Seems to me there is an article in the 750 FAQ on making your own U-tube manometer. no need to waste your bucks on a mercury manometer when water will do the trick only need a few tablespoons of water so no need to worry about ingesting it in your precious engine if you fumble around and only get one side hooked up and suck up the water. You could also get at your local tropical fish store some very cheap valves to allow a more casual hook up. The idea is to balance the two columns of water to the same level at idle and 2500rpm by adjusting just one of the two idle set screws on the Weber. Does not matter which screw could be either. Generally you adjust the screw which lowers the high side water column but this is not always the case. The important thing to remember is adjust only one screw so that the other stays closed completely to get the columns of water to the same height in the u-tube *"Higgy" at http:ducatipaso.org*

Here are some picks of mine. I added red food colouring to the water. I looped the ends around a ladder and back to the carbs:*"Romus" at http:ducatipaso.org*

The tap at the bottom works well because you can start the bike first then when the bike is going open the tap.

The tubes looped over a ladder and back around to connect up to the carb.

In the picture above the right side looking over the back of the bike) is up, so the left (facing the back) air bleed is closed and the right side (right side of the e bike facing back) is opened until the levels are the same.

After doing this balancing, retune the idle mxture screws.

4.5 Auxiliary Venturu, ETs and JETS

I ordered from http://www.piercemanifolds.com/ Tall aux venturis 4.5 "Romus" at http:ducatipaso.org

Instructions:

1. Take off the tank

TIP: An easy way to get at the fuel lines in the process of taking the tank off is to prop the back of the tank up on a roll of tape.

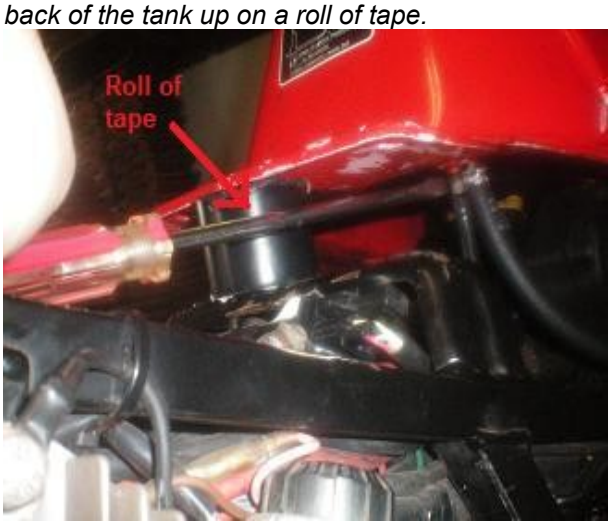

2. Take off air box, carefully undoing nuts that hold on the venturi air horns and disconnect the crankcase rebreather tube.

3. Disconnect the fuel hose where it connects to the carb.

4. Undo the 4 bolts at top of carb and lift off top of carb, being careful not to the damage float.

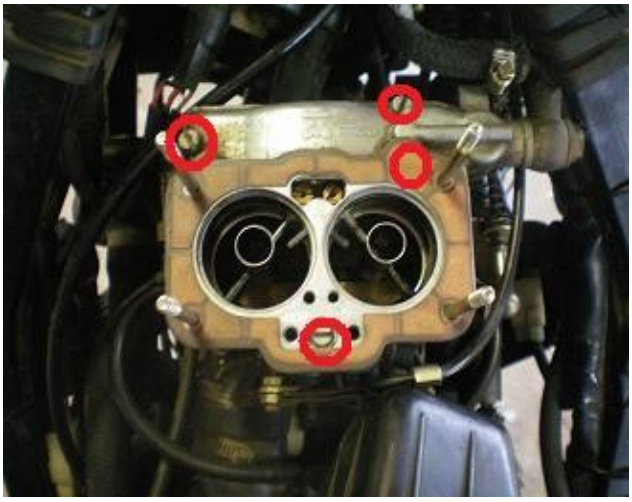

You are now looking at the uncovered carb. The two funnels are the top of the 4.5 auxiliary venturis. The 3.5 ones are shorter.

5. Slip the accelerator cable off the ball joint.

6. Undo the 4 bigger bolts at base of carb. The front ones are tricky.

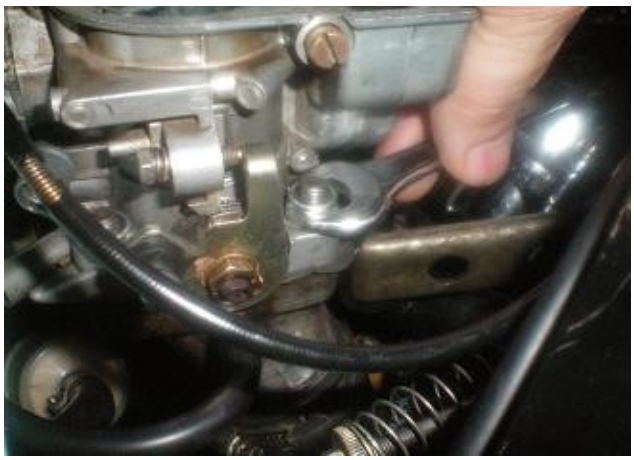

Now you can handle the carb on your knee on chair beside bike. It still is attached by the choke cable.

7. Turning the carb over so you can get to it from underneath, use a wooden dowels (I cut of a paint brush handle) to tap out the aux venturis from below.

8. Tap the new one into place.

Note: Some auxilliary venturi are held in place with a spring clip and many are staked. Careful removal of the stake with a small file or Dremal tool and a wooden drift can help here as well.

DONE

TIP: Now is a good time to install a Holley fuel regulator

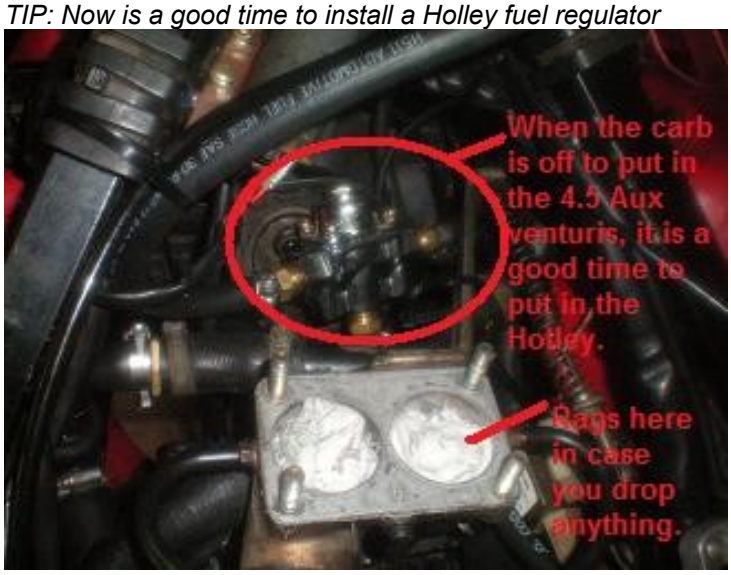

TIP:
Taking the nuts of the bell mouths is tricky. I pushed an 8mm socket onto an Allen key with a little bit of tape on the end so it stayed in place. The Allen key is the size used for the top tank fairing screw. Using this tool you can get to the air horn bolts through the top holes in the air box. The holes in the top have plastic stops that could be taken off.

You need to take the loosened air horn nuts off and on with two fingers. Have a rag under the air box in case you drop them.

*Do not drop the Air horn nut, do not drop the nut, do not drop the nut, do not drop the nut, oh, *&^&^ (*&^. Tickle, tickle, and tinkle.*

TIP: Replacing the crankcase rebreather tube (that feeds engine gasses back into the air box) with a filter to the atmosphere, will help with tuning, if you are using an air/fuel meter. After tuning if you want to be kind to nature the rebreater tube that connects to the air box can be replaced.

To drill the custom ET F27

To drill the custom ET, first unscrews and lift out the Main/ET/AC cluster.

It is easy enough to drill the holes by hand because the ETs are made of copper. You can purchase mini-drill bits easy enough.

You can double check the drill bit size by checking it fits comfortably through one of the other holes.

Drill the holes.

Jets

When only the air box is off, you can unscrew and lift out the Main/ET/AC cluster and replace the AC and Main jets.

TIP: It helps to have a pair of tweezers or tape to lift them out.

When you take the Main/ET/AC cluster out you can separate the three parts, usually by hand. If they are a bit hard, you could gently use pliers over a rag. Be gentle because the copper can easily be bent out of shape easily.

The idle jet is easy to change, being accessible from the outside of the carb. Just be careful to lift out the O ring that comes with it.

The Accelerator Pump jet screws in just behind the AC/ET/Main tubes. There is a thin washer between the Pump jet and the carb. Be very very careful not to drop it.

Where to shop

http://stores.ebay.com/ALFA1750S-CARBURETORS-PARTS-STORE (half the price of others for jets)

http://www.fastroadcars.co.uk/shop/index.php

http://www.piercemanifolds.com/products.htm

In Australia:

A few more tips

TIP: During testing and adjustments have half a dozen spare spark plugs. Sometimes, when you might foul the plugs in the process and that would mess up further adjustments. Check the plugs during the tuning process and if fouled change them.

TIP: Worried about damaging your fairing bolt holes when taking them on and off? Cut some rubber off some spare fuel line and use them as a temporary outside washer.

TIP: Keep notes in a book.

> *Good. Got the fairings back on...hold on did I actually screw the AC/ET/Main rods in...can't remember...Oh, better check - take the fairings off, tank off, air-box off, Umm, oh yes I did screw them in. *&^&)(&)(.*
>
> *Where are my notes? Are they the ones on the garage wall; are they the ones tucked in my Weber book, the ones I wrote in the back of the Weber book, the ones on the envelope on the floor, or that other envelope or the A4 over there?*
>
> *Let's see, if I change that, and that and now that, and this like that, yes, that's better. Umm, What did I just do?*

TIP: In order to save time when making idle adjustments, if you lengthen the fuel and return lines you can sit the tank back on a block of wood. this is better than a mini tank because there is a noticeable difference caused by fuel pressure difference between the real tank and a mini tank.

Once the idling is working well, the tank can be put back for a road testing. The road which puts a load on seems to make the idle a bit richer (0.3AFR) than in the garage.

TIP: When you put the air box back, don't forget to push the choke cable up in its airbox slot. If you don't it will jam under the accelerator cable/speed screw connection.

Useful links

http://www.webercarburatori.com/?p=handbook&s=1

Weberology 101 forum at http://www.webercarburatori.com

http://ferrarichat.com/forum/showthread.php?t=208562&highlight=higgy

Look for postings by "Tuner" at http://www.innovatemotorsports.com/forums/

http://nico.zeroforum.com/zerothread/376140

http://www.webercarbsdirect.com/

http://www.groupk.com/tec-carbs99.htm

http://www.scuderiatopolino.com/UserFiles/TuningofWebercarburetorsrev2.pdf

More detail on how the Weber works

*1. **The air flow is important aspect of setup** i.e. more air through the combustion chamber = more horse power, as it is for any motor (well actually that air has to also have "signal"/vacuum as it goes through the venturi to suck in available petrol). So, after market exhausts, such as Termignoni, help to extract burned mixture and changing your air filter e.g. to K&N, ITG help feed air in - also making holes in air box lids or replacing the air box with cone filters, or adding intake pipes to the air box et etc are all endeavours aimed to increase airflow.*

In the Ducati Desmoquattro Performance Handbook p55 Neil Spalding says that opening the air box lid helps destroy resonance harmful to the engine, not suddenly letting the engine breath more. This may be a different reason than we may think, but one that delivers more power, nevertheless. Ducati started perfecting air box design after the 906 partly by increasing the size of the air box to take advantage of resonance. So opening the air box lid is a step in the right direction. The more open the lid the more power, but the degree you open your air box lid may depend on whether you are happy with the increased noise.

A semi-open and an open air box read the same AFR. A closed lid is .5AFR leaner than an open one of any configuration.

There may be a loss of high speed performance with an open air box due to vacuum behind the fairing - room for experimentation with intake pipes and air box lid variations.

***Another aspect of setup is to ensure the spark plugs are working well and the bike timing is set correctly**. A thing called a flow bench is sometimes uses to check flow of carbs in relation to air box and intake design.*

*2. **The Paso factory setting seems rich at the low end and lean at speed**. This rich to lean range is too wide for best performance. Maybe changes in fuel over the years have exacerbated this range. This means there is snake affect (~) of the AFR across the speed range. Changing the jetting and opening the air box lid can even things a bit and increasing the Float level (which is a common attempt to fix of a cruise bog/lean peak in the Weber DCNF) isn't enough to balance out this snake effect, so **the existing F27 emulsion tube (ET), which is the supposed to even out the AFR across the rpm range, also needs attention**. The ET is in the middle of the carb - adjusting the AFR provision depending on speed. The jets set the amount of air and fuel that is measured to the ET across the speed range. **Jets can also change for the other idle and accelerator pump circuits.***

*Carburetors have circuits that work for the different idle and driving modes. **The Idle circuit/jet works for idle and in the case of Webers also for low speed running transition circuit**. This transition circuit provides fuel mix through tiny holes in the venturi wall just under the butterfly plates. This works at ~2,000 to 3,000rpm and then the **main circuit** kicks in. That is made up of a main jet, an ET, and an Air Correction (AC) jet. They are connected as one rod and slotted in the ET chamber.*

*The ET allows the AC to increase its affect as the rpm increases in order to counteract the exponentially increasing venturi suction - keeping a balanced AFR. Another circuit is the **choke**, which on the Paso is usually left alone in favour of a couple of turns of the throttle to squirt some petrol into the venturi before starting. Another circuit is the **Accelerator pump jet**, which squirts fuel into the venturi on anything more than gentle acceleration - in order to meet the fuel demand until speed is picked up/venturi suction is fully in effect, for the desired speed. It does not come in when you very gently accelerate, but any more and it does. If the carb is jetted correctly there is no need to increase the size of this jet. If anything it could be reduced in size!*

The air is drawn into the venturi by vacuum created by the engine combustion chamber and venturi vacuum suction from the shape of the venturi that speeds up air causing vacuum to draw in on-demand emulsified/air-rated petrol from the ET chamber, which is in turn fed from the float bowl, which is in turn fed from fuel pressured delivery (operated like a toilet cistern) from the fuel pump, from the gas tank. Venturi vacuum suction is enhanced/sensitised/centralised by a smaller auxiliary venturi that fits inside the bigger venturi.

The venturi pressure/signal is created by the speeding up of air through the narrow venturi. Just like airplane wings which cause lift via the pressure loss as the air travels faster over the top of the wing (because of the shape of it). The combustion chamber suction exists with the burning off of oxygen, thus pulling in air to the venturi. Actually it's not suction - normal pressure air pushes into any vacuum thinner molecule space. If you look at the shape of the auxiliary venturi you can see its wing shape and how that will also create a finer vacuum again in the throat of the venturi.

The goal is to have all circuits (as well as the outside air and petrol intake and exhaust, venturi signal, timing, electrics, emulsification of air and petrol, and supply of AFR) working well together for the conditions you want (whether sea level, temperature, or race high rpm track speeds). The carb does something like "whistling" in that the setup and carb parts need to be clustered correctly for just the right air flow and air/fuel ratio (AFR) across the speed range. The need for clustering makes tuning tricky - changing any one part affects the need for adjusting others. Like whistling. For example, changing the fuel pressure means it enriches everything a bit and may need smaller main jets and the idle adjusted, and/or the fuel pressure change can be adjusted back by lowering the float bowl. Being aware of the variables and tweaking the parts can be tricky. If one part is widely out the whole system/whistle doesn't work right.

The best (stoichiometric air/fuel ratio) AFR for burning is 14.7, but the general preferred settings for horse power combustion in carburated engines is between low 12s and mid 13s. Narrow that down to high 12s - 13.2 AFR for the Ducati engine and its spot on. Maybe, enriching it slightly at high speed to avoid over heating engine problems is preferable. [/I]

3. Webers like a recommended ~ 2.5 - 3 psi fuel pressure. Ducati generally recommend 3psi. So, for the 750 where the pressure was above that 750 ducatisti have put on a Fuel Pressure Regulator to stabilise pressure down to ~ 2.5 - 3 psi. The 906 factory fuel pressure is different than the 750 due to the different return fuel line system which has ~1.8psi at the carb. Anywhere between 1.5 and 3.5psi is probably fine. It can be adjusted up nicely to 2.5psi by connecting a Holley 12-804 fuel pressure regulator. The Holley also evens out the pulsing of the pressure from the electric fuel pump. Webers like flow not pulsing. The pressure and flow feeds the float bowl level, which on the Ducati 906 should be 42mm. The float level can be adjusted, usually with the intention of raising it to push more petrol into the ET to get rid of the common flat spot problem. High float bowl=rich, low=lean. 40mm is high and 44mm is low (measurement is from the top not from the bottom). Putting in the Holley and setting it at 2.5psi fine tunes control of the petrol intake to the carb, but does not seem to be at all critical for the 906.

4. A common tuning issue with the 36 venturi/choke is lumpy running at low rpm. This is due to a weak vacuum/signal in the main venturi. This is because the factory 36 venturi/choke is suited for best performance at speed - the trade off of that is that it lacks signal at low speed. If you like you can decrease the venturi to 34 but that does not seem popular because of the high speed performance loss. See 4.2 below for an important better overall fix which sensitises the venturi signal by changing the aux. venturi form 3.5 to 4.5.

Another common tuning issue with the DCNF is ***bogging at cruise on light acceleration****. It does not happen on anything more than light acceleration because the Accelerator fuel jet kicks in, but it does on gentle acceleration - which is usual while cruising. This is why ducatisti often increase the float level above the factory setting. The fuel pressure if increase also increases the AFR, so that must mean the increased pressure surges in to the float bowl more vigorously and increases the level a bit. So between the fuel pressure and adjusting up the float level a bit (e.g., to 40 from 42 (not too much)) - that will bring fuel in better and helps reduce the bogging on cruise that is common in the DCNF.*

Another way to bring the fuel in earlier is to increase the ***set of Main and AC*** *because with bigger sets the main has more effect at low speed (where the cruise bog is). The risk of this is that with bigger sets the AFR starts to go up and down on driving like a saw tooth. This sort of thing is why when you do the jetting off another person's setting you need to try one main up and down and one AC up and down to see if any of the variations gives a better result. If in fact the Main is better one step up, you should also check up two or three or four AC jets sizes and likewise.*

The idea of sets is like whistling with a big booth versus whistling with a smaller mouth. Both work, but it seems a smaller Main and AC set is slightly better for AFR. Stepping up one size Main jet has the same effect as instead stepping up three steps of AC jet. Stepping down one Main jet is the same as stepping down three sizes AC jet. For example, a Main 175 and AC 155 gives about the same AFR result as a Main 180 and AC 185. One step up Main and three steps up AC. In either case the AFR is about the same. But

the AFR reading of the bigger set was a bit saw tooth and the smaller set more stable. In general then the smaller set is better, perhaps with the fuel pressure set up from factory to the anyway Ducati recommended 3psi and/or the fuel level tweaked up just a bit. The three things of smaller set, fuel pressure and float level should resolve the typical DCNF cruise bog.

A secondary DCNF issue is a bog that can occur at cruise and very light acceleration - if you get that a fix is to raise both the main and AC jets up (PS 1 main jet step up = 3 AC jet steps up. Again, a good reason to check your cam timing and open your airbox

4.1 Warm air is better for burn mixture (helps with fuel atomization), so efforts in cold climates to draw in from motor heat help. Air temperature also affects air/fuel ratio as doe's altitude, so ***some seasonal re-jetting is needed for optimal AFR tuning****. By the way, in the northern hemisphere seasonal changes vary more widely (20 degrees C) that in the Southern hemisphere (10 degrees C). So re-jetting would be more important in the northern hemisphere. Get the jetting right and you can live with the seasonal changes in pressure.*

4.1 ***The ET is*** *a tube with holes through which fuel enters into a well from the bottom and air enters into the well from the top. The way the ET works is all about vacuum/signal pressure. Higher pressure pushes to low pressure, remember. The atmosphere pressure in the float bowl pushes the fuel through the Main jet. The atmosphere pressure pushes through the AC jet and out of the holes in the ET tube. The air pushed in through the AC jet relieves the pressure in the ET well to break the fuel increasingly to counterbalance the exponentially increasing venturi vacuum/.signal as speed increases. In the process the air and fuel emulsify/percolate together. For the only explanation that I can find anywhere (including Weber tuning books) see* http://www.innovatemotorsports.com/forums/showthread.php?t=3371

Essentially, the emulsion effect [caused by the number and size of air holes in the ET] will richen the low flow and the AC jet size, ET well and Main jet size restrictions will control the increase or reduction of high flow.

An ET change is in fact needed to get a balanced AFR on the 906. The existing F27 is rich at low speed [too many ET air holes] and lean at high [AC jet needs reducing].

As "Tuner explains in the Innovative Motor Sports Forum.
http://www.innovatemotorsports.com/forums/showthread.php?t=3134

"The case with these carburetors that are avenging their possession is most of them are only rich at light load and are usually lean at WOT. The more power (air flow) the engine has, the more upside-down the situation gets. Most of them get leaner as the RPM climbs. If they are rich enough for maximum RPM and HP, they are sloppy rich at small throttle openings."

This means there is a snake effect (~) of the AFR across the rpm range. Welding/bogging up holes at the top of ETs leans what they would otherwise be at idle and low speed running. Increasing hole size and/or moving some holes down further to the bottom end of the ET enriches high speed running compared with what it would otherwise be. For the 906 this means customising an ET as the other ETs you can buy that we have tested (F30, F33, F36, F43, F44, and F25) on their own over enrich the mix one way or another. ET naming conventions are erratic, so you need to look at charts to compare differences (See Part Two of http://www.webercarburatori.com

I tested bogging and drilling holes using an F30 and the results when tested with the LC-1, with no other changes, was that filing up the top two rings leaned the mix nicely. It needed experimentation - see http://www.innovatemotorsports.com/forums/attachment.php?attachmentid=1803&d=1177457666 and http://www.innovatemotorsports.com/forums/showthread.php?t=3371&page=2. In case these links are broken, see Appendix _ Understanding the ET

4.2 The Auxiliary Venturi *(smaller upside down T-shape venturi slotted into the big carb intake venturi) increases sensitivity to the vacuum based atomization process from air flow. It controls the rate of fuel removed from the float chamber at the ET having the same effect as the diameter of the ET.* ***Changing the 3.5 to a 4.5 leads to a significant improvement on the 906****. It will take out transition stumble on its own as long as other jetting is not badly out.*

4.3 Idle jets, if increased, enrich the mixture (increases the fuel ratio) at idle and low rpm. The idle jet is very significant for driving around town and cruising, since the Weber has tiny holes in the venturi wall that get

uncovered by the butterfly valve as it opens. These holes are fed through the idle jet. So, the idle jet is for more than just idling! Once the right size jet is installed idling AFR is then adjusted via the idle mixture screws, with the idle speed set by the idle speed screw. The idle jet continues to operate evven at WOT.

***There is another fine tuning point which is done at idle and that is the air bleed screw**. These are the screws angled out more and above the idle mixture screws. They tune the amount of air that passes through the venturi where the butterflies are. Opening one of the air bleed screw will result in even balance of airflow through both venturis. So, if one venturi is sucking more air through than the other that side idle mixture screw would be closed and the other side opened a bit to even it out. This is best done with a homemade vacuum balancer/manometer. Instructions for this are in the Workshop manual page D.4*

4.4 Accelerator Pump jet squirts plenty of fuel - too much. It will drop AFR down 1.5 - 2AFR, which if your jetting is reasonably tuned will drop the AFR down into the high 10s or low 11s. That is very rich. Therefore this Accelerator Pump jet can be dropped down from 40 to 35, so that it will drop down to mid 11s to low 12s. That is a lot better. It does not supply less fuel but squirts it as a smaller jet over a longer period. To go lower than a 35 jet will require changing the pump cam.

4.5 Coil replacements help with the spark plug strength. Timing too should be correct. There is a Main Feed relay mod which can be done to improve the voltage to the coils (factory 906 wiring goes battery-ignition-battery-coils and loses some voltage in the process). Fixing this loss also helps prevent spark plugs missing. Iridium DPR8EIX-9 spark plugs are also popular.

4.6 Tuning can be done with reference to checking spark plugs, soot in the exhaust pipe and sound, driving feel and/or better still a Digital Air/fuel Ratio Meter such as the LM-2 from Innovate (which measures exact AFR).

*Imagine a table/cluster of settings for varying conditions. **The jetting cluster needs to be linked to setup arrangements** and take into account atmospheric conditions. Also, it seems every engine is slightly different, so copying another bike's cluster if you have a similar setup, still needs testing one step Main and AC jets either side to dial it in just right.*

*The Webers are famous for the ability to change all the parts, so they are the most versatile for high performance tuning - that is great as long as you take the effort to tune them. The only lack it seems is no power jet, which means there is no automatic adjustment for weather or altitude changes. So, the Weber does need rejetting across seasons if weather and altitude significantly change i.e., if you want to keep the bike running at a high performance level. **As long as the Webers are tuned correctly they are the best carbs for high performance tuning according to many opinions.** They also have a Ferrari sound.*

The large venturi can also be changed for a smaller size for better lower speed tuning and doing that may also be a better for the 750 engine.

Learning curve from jetting, before working on the ET

Jetting changes did not take the snake effect out - too rich at low and too lean at high (DCNF standard characteristics). If you tip more fuel in by emphasising the Main jet increase, the top end enriched nicely (more power), but the low enriches too much (less power). If you bleed more air in by emphasising the AC jet, the low end leans nicely (more power), but the top end leans too much (less power).

However, increasing the Auxiliary Venturi from 3.5 to 4.5 definitely improves the sensitivity at low speeds. Since the 36 Main venturi is quite big for low speed (being better for high speed).

Reducing the Accelerator Pump jet from 40 to 35 helps maintain a better AFR on WOT. The 40 Pump jet at WOT squirts in a fair amount of fuel, which if AFR normal is 12.5 at WOT it will drop to below 10 AFR. That is too rich (power loss). Going down to the 35 means it will drop to mid to high 11s once moving at anything over 20kph and that is much better. It does drop to 10.5 from the light, when there is hardly any forward movement, but that is just tolerable for the short time it exists.

Learning curve from experimenting with ETs

First, just to clarify: the e-holes in the ET allow air in from the AC jet; accept for the bottom ring of e-holes, which let in the fuel from the Main jet. Just about everything you read says more holes leans. It is the

opposite, because the increased air (through the increasingly uncovered e-holes as speed increases) carries fuel at a faster velocity. Adding more or increasing the size of the air e-holes enriches!

Since the AFR original line was too rich at the low end and too lean at the high end (typical DCNF characteristics), the idea is to either lean the low end by filling holes in the top of the ET* but since I found the ET27 tube likes the holes in the top part for sensitive response at low speeds and sensitivity to transitioning between the transition and Main circuits, success was found by drilling holes at the bottom part of the ET - to enrichen high speed running. This was achieved by drilling two more e-holes and slightly enlarging the bottom Main jet e-holes (I had to experiment to find this out) **

* a *negative side effect of filling top holes in the ET was that although this leaned the low end it also brings on a rich dump at very first acceleration which then leans for enough time to cause bogging. This is the typical DCNF lean spot at about 4k rpm, but we don't want to bring it on. Bogging up the top e-holes also contributed to hanging/loading up at the lights after deceleration.*

Adding two similar e-holes below the F ring of holes made a significant enrichment to high end AFR. That placement had proved good also from the existing hole the F30 ET which behaved richer at the high end. Adding holes to the F ring of holes enriches too much in one place so it is better to spread it out. That was the reason I also drilled out (just a bit) the Main jet e-holes. That small difference from 150 to 160 enriched .5 AFR at the high end in a way that spread it out, also.

Understanding the ET

For an explanation of how the ET tube work, here is a posting by "Tuner" in the Innovative Motor Sports Forum. In case these links are broken, the information is copied below:

Accessed from the WWW on Dec 2009. As posted by "Tuner"
http://www.innovatemotorsports.com/forums/showthread.php?t=3371

...Incorrect two-phase flow is at the root of all this aggravation [of understanding carb tuning and more specifically the intricacies of the emulsion tube]. People who have drill bits but don't know why to use them have been molesting innocent carburetors for a long time. Now some of them are in charge of the manufacture of new carbs and they think they have improved them by using larger drill bits to make the air bleed and "emulsion" orifices. I guess the guys that engineered the original carburetors on the old muscle cars were pretty stupid or they would have "improved the emulsion" 40 or 50 years ago when they had their chance. After all, they had the awesome power of the single-point ignition system at their disposal, they shouldn't have been afraid of a little soot.

It is well documented that introducing air [via AC jet] into the main well [ET chamber] encourages low signal flow and can encourage or discourage high signal flow. The natural characteristic of a plain jet and nozzle (no air) is to get richer as airflow increases. The purpose of the air bleed system [AC jet] is to modify that behaviour to accomplish a constant (or the desired) air/fuel ratio over as wide a range of airflows as possible. The particular ratios for power and cruise are realized by the selection of jet and rod or jet and auxiliary jet (power valve channel). The purpose of air bleeds is not to emulsify but to accomplish the correct fuel delivery. Emulsion is just a beneficial side effect.

What I'm going on about here is Klaus' remark about "correct two-phase flow". That is the description of a fluid flow that is made up of a liquid and a gas flowing together in the same conduit. As the ratio of gas to liquid increases (more gas, less liquid), at some point the gas bubbles coalesce from many small ones into a few big ones and the flow starts to "slug" and become erratic. The carburettor nozzle spits like a garden hose with air in it when there is too much "emulsion" air.

An emulsion of air and fuel has reduced density, surface tension and viscosity compared to fuel alone. This increases the flow of fuel considerably, particularly in low-pressure difference operation, at low throttle openings or lower engine speeds. Just how much of an increase (richer) is dependent upon where and how much air is introduced into the fuel flow.

Mainly, what must be understood is that because the fuel discharge nozzle connects the venturi to the main well, whatever the low pressure (vacuum) is in the venturi, it is also the pressure in the main well? The air

bleed is in the carb air horn or somewhere else where it is exposed to essentially atmospheric pressure, which is higher than the venturi pressure. This pressure difference causes air from the air bleed to flow through the emulsion system into the main well and to the nozzle. The flow of air can have very high velocities, approaching sonic in some orifices. The airflow literally blows the fuel toward and through the nozzle. A larger main air bleed will admit more air to the emulsion system and that can increase or decrease fuel flow to the engine. The size, number and location of the other air holes in the emulsion system, the size of the main well flow area, the size of the nozzle and the specific pressure difference at the moment are the determining factors. The ratios of air volume to fuel volume to flow area, with the air volume's expansion with the venturi velocity induced pressure reduction being the key. The bubbles expand as the pressure drop increases with airflow. Suck on an empty balloon to experience the effect.

The fuel flow through the main jet is the result of the pressure difference between the atmospheric pressure in the float bowl and the venturi air velocity induced vacuum acting on the nozzle and the main well. The venturi vacuum in the well is reduced (the pressure is raised) by the "air leak" from the air bleed. This reduces the pressure difference that causes the flow through the main jet. If the air bleed were big enough, the pressure in the well would be the same as in the float bowl and no fuel would flow. Think about drinking through a soda straw with a hole in it above liquid level. Bigger hole, less soda. Suck harder, not much more soda. Big enough hole, no soda. This is the means by which the emulsion system can "lean it out on the top end". Incidentally, the vacuum that lifts water up a soda straw is in the most sensitive operating range for emulsion systems.

It is in the lowest range of throttle opening, at the start of main system flow, that the effect of adjusting the introduced emulsion air (and its effect in increasing the main fuel flow) is most critical. Small changes can have large and sometimes unexpected or counter-intuitive consequences. The goal is to seamlessly blend the rising main flow with the declining idle/transition system fuel delivery to accomplish smooth engine operation during opening of the throttle in all conditions, whether from curb idle or any higher engine speed. The high speed and load AFR correction is usually easily accomplished, in comparison.

The vertical location of the bleeds entering the main well influences the fuel flow in the following ways.

1: Orifices [ET holes] above float level or between the well and the nozzle allow bled air to raise the pressure (reduce the vacuum) in the nozzle and above the fuel in the well. That delays the initial start of fuel flow from the nozzle to a higher air flow through the venturi and is used to control the point in the early throttle opening where the main starts.

2: Orifices at float level increase low range (early throttle opening) fuel flow by carrying fuel with the airflow to the nozzle.

3: Orifices below float level increase fuel flow by the effect of lowering the level of fuel in the well to the hole(s) admitting air. This is like raising the float level a similar amount (increases the effect of gravity in the pressure difference across the main jet) and also adds to the airflow carrying fuel to the nozzle. Locating the orifices at different vertical positions influences this effect’s progression.

4: The "emulsion holes" influence is greatest at low flows and the "main air bleed" [AC jet] has most influence at high flows.

In the first three cases above, once fuel flow is established it is greater than it would be with fewer or smaller holes. Visualize wind blowing spray off of the top of water waves. It doesn’t take much pressure difference to cause the velocity of the airflow through the bleed orifices to have significant velocity in the orifice, even approaching sonic (1100 F.P.S.) if the orifices are small. The phenomena of critical flow are what limits the total air flow through an orifice and allows tuning by changing bleed size.

Essentially, the emulsion effect will richen the low flow and the air bleed size, main well and nozzle restrictions will control the increase or reduction of high flow. Again, the desired air/fuel ratio is the primary purpose of the bleed system. "Improved emulsion" is an oxymoron if the modification of air bleeds to "improve emulsion" results in an incorrect air/fuel ratio in some range of engine operation. Correct proportioning of all the different bleeds (and, of course, the idle, transition and power circuits) will give the correct air/fuel ratios over the total range of speeds and loads and a flat air/fuel ratio characteristic at wide open throttle.
.

Accessed from the WWW on Dec 2009. As posted by "Tuner"
http://www.innovatemotorsports.com/forums/showthread.php?t=3371&page=2

The first attachment below is a page from Obert's book "Internal Combustion Engines" with a summary of "Restricted-Air-Bleed Carburettor behaviour. In the description, A and B are what we've been calling "E-Holes" [the holes in the emulsion tube] and D is the Main Air Bleed [AC jet]. ... It isn't an exact science in the first place and the wide variation of engine combinations makes it so trial and error is the only method by which success may be found.
http://www.innovatemotorsports.com/forums/attachment.php?attachmentid=1803&d=1177457666

the plunger descends under the pressure of the plunger spring B and fuel is forced out through the accelerating jet. When the throttle is fully depressed and at rest, spring B forces the plunger to the bottom of the well, thus continuing the flow of the accelerating charge. This pump has a distinct advantage in maintaining the acceleration charge over a relatively long period of time.

11-8. The Restricted-Air-Bleed Carburetor. The rising characteristic of the plain jet can be corrected by bleeding air into the discharge tube. Figure 11-10 illustrates a carburetor which contains an air bleed into the main nozzle and therefore is called a *restricted air-bleed jet carburetor* (the most popular type of all). Here air enters the nozzle through the small (restricted) hole at D, and enters the liquid stream through the larger holes at A and B. Thus the fluid stream becomes an emulsion of air and liquid with negligible viscosity and surface tension. As a consequence the mass-flow rate of liquid is *increased* considerably at low suctions. In fact, with too many (or too large) holes at B, the charge is enrichened (mb, Fig. 11-11); with too few holes, the characteristic approaches that of

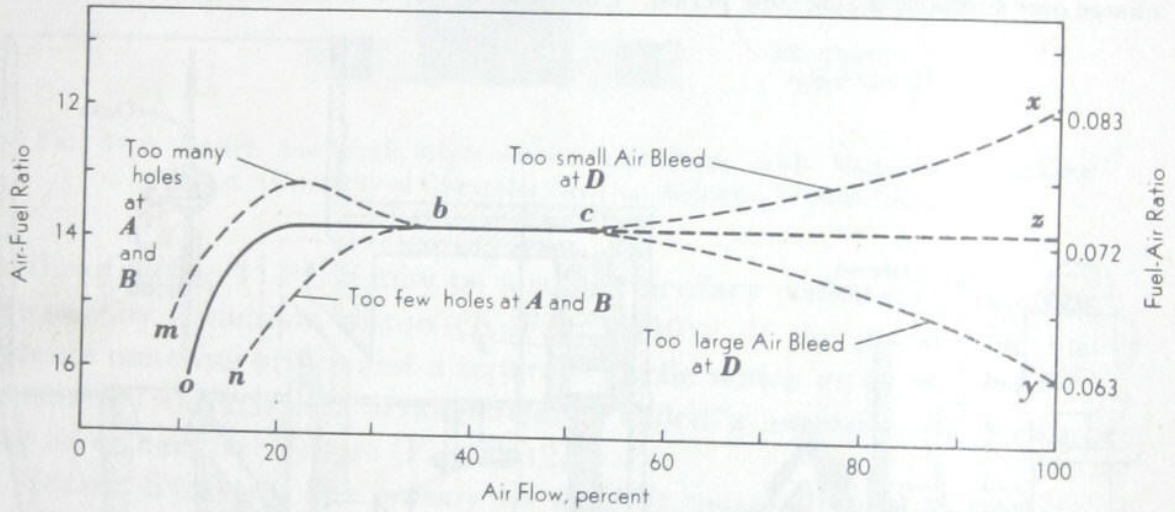

FIG. 11-11. Effects of area D and areas A, B of Fig. 11-10 on the delivery characteristics of the main jet.

the plain jet (nb, Fig. 11-11); with the correct holes sizes and spacings (experimental) o is located at a low air flow (ob, Fig. 11-11).

As the suction increases, the influence of viscosity diminishes and therefore the air entering the nozzle decreases the flow rate of liquid. The amount of bled air is controlled by the size of the air bleed at D in Fig. 11-10; if this bleed is too *small*, the amount of bled air is insufficient to compensate for the rising characteristic (cx, Fig. 11-11), if this bleed is too *large*, the bled air displaces considerable liquid and the characteristic declines (cy, Fig. 11-11); if the bleed is correctly proportioned the characteristic will be flat (cz, Fig. 11-11). (The holes at A, B, Fig. 11-10, have negligible influence on the

David Hooau's relay mods

Accessed from the WWW on June 2009 (http://www.geocities.com/davidhooau/paso/wiring_mods.html). The link is broken, so I have copied it here.

Wiring Mods for an '89 906 Paso

When I purchased my 906 I was horrified with the electrical system's operation. A quick web search revealed that a number of Paso owners had similar problems which had been resolved with the addition of relays to bypass some of the excessive wiring/connector losses, but that no-one had posted the changes made to their bikes.

Here's how I did it.

Note that in the following I'm referring to an '89 906; wire colours and connector name/pin out WILL vary on other years and models.

Caveat Emptor! I offer this information in good faith, but with no warranty as to accuracy or suitability to other makes and models: there may be errors, and the only support I'll offer is to buy bits of your burnt out wreck at bargain basement prices!!

I'd appreciate feedback on other people's experience, especially on any changes required for other models.

Symptoms:

A: Poor running with a low battery at low revs.
B: Poor lights, which 'pulsated' at idle, and were dim at cruise.
C: Overcharging at cruise speeds.
D: Starting difficulties.

Looking at the schematics and taking measurements on the bike led to the following conclusions:

A: The first major loss is in the circuit containing the ignition switch, where the path is as follows. Note that 'IC' refers to the ignition switch connector, and '4C' refers to the 4 pin connector that lives under the frame next to the tank mounting bolts which connects the undersea electrics tray to the main loom; 'F' refers to a fuse.

Batt-F3-4C-IC-switch-IC-4C*-F2-4C**

4C* is the first feed point, and supplies the coil+ (red wire) and the regulator sense (Bn wire). These wires are crimped together in the 4C connector.

4C** runs everything else in the bike (except the fan).

I was dropping up to 2.3 volts from the battery to 4C**, which includes 2.0V from the battery to 4C*, which explains most of the bike's problems, including the overcharging which seems to be a common complaint.

B: The lighting circuits are fed (eventually) from 4C**. LC refers to connector associated with the lighting switches on the left-hand handlebar; HC is the headlight bulb connector.

4C**-LC-switches-LC-HC

Here I was losing an additional 0.8V, which would be higher if 4C** were at a higher voltage.

C: The return path (except for the regulator and ignition unit) are all via the frame/engine, which are connected via 8GA wires from the battery to the frame, and then to the engine. During normal running, there was about 0.1 volts dropped from frame to battery -ve, however during cranking, this rose to about 0.8V. (This measurement required a storage oscilloscope to perform correctly, as setting the DVM to peak-hold captured only the cranking transients.)

The net result of all of the above was that during cranking, the coils were seeing less than 10V, at idle the lights would pulsate, at cruise the battery would cook but the lights were dim, the last two items assuming that the engine actually started at all, which it did: reluctantly but miraculously!

Ponderings:

I decided on the following changes:

A: To insert a relay to provide a 'main feed' to the 4C** point, cutting out the major losses. By itself, this change should fix most of the problems.

b: To use a second relay to provide an 'engine feed', which fed the ignition unit, the coils and the fuel pump, the latter so I didn't have to listen to the constant bloody chatter while working on the bike's electrics. Also it's because I'm thinking of injecting the bike at some stage, and so want a higher current feed to the engine circuits.

C: To create a 'light feed' which feeds two relays mounted up front; these directly connect to the headlight connector. I ride a lot at night, so maybe this matters to me more than others.

As an aside, I'd highly recommend swapping the CEV headlight for the KOITO. I had to do this to meet Australian compliance rules when I imported the bike and was impressed with the difference. I obtained a second hand unit from a '86 Yamaha FZ750, and needed to trim the plastic moulding around the front of light to prevent interference with the fairing, and then use spacers to shift the headlight forward about 5mm so it protruded through the fairing hole correctly.

D: To update the 8GA earth leads to 6GA.

E: To update the starter cable to 6GA, as I'm running 11:1 compression and so needed a bit more starting grunt.

F: To investigate and review the charging circuits.

I sourced Bosch relays, part number
0 332 019 150 . These are 30A continuous, low holding current, and are a little plastic cube, about 28mm each side, with a plastic tab for mounting. They accept spade connectors, and conveniently have two spades on one side of the switched circuit. Any high quality relay will do the job. I used 4 of them, two under the seat, and two up front for the lights.

The relays are labelled with numbers for each terminal, to which I've given a code for the following sections:

Number	Function	Code	Note
85:	coil a	Ca	the two coil terminals are
86:	coil b	Cob	interchangeable
30:	switch	A	
87:	switch	B1, B2	these 2 terminals are common

Under seat mods: (main feed and engine feed relays)

By moving the flasher relay to the far left side of the electrics 'tray' and rotating it through 180 degrees, I was able to mount two relays between the flasher and starter relays, with the terminals facing rearwards. The left rear tray mounting bolt is used to mount the flasher, with new holes drilled for the new relays. The new wiring should run quite nicely around the back and right hand sides of the tray.

I mounted a 6mm screw between the flasher and the digiplex to function as an earthing point for what is to follow. The tray looks (a bit) like this:

```
    Front of Bike
-------------------------------------------------------------------------------
|                                                                             |
|             ----------------------------------------    ---------         |
|            |                                        |  |         |        |
|            |                                        |  |         |        |
|            |                                        |  |         |        |
|            |                                        |  |         |        |
|            |                                        |  |         |        |
|            |                                        |  |         |        |
|            |            Digiplex                    |  |  Fuses  |        |
|            |                                        |  |         |        |
|            |                                        |  |         |        |
|            |                                        |  |         |        |
|            |                                        |  |         |        |
|            |                                        |  |         |        |
|            |                                        |  |         |        |
|            |                                        |  |         |        |
|            |                                        |  |         |        |
|             ----------------------------------------    ---------         |
|                                                                             |
|            X <--Earth screw                                                 |
|                                                                             |
|                     M           M <- relay mounting screws                  |
|   ---------     ---------    ---------         ------------               |
|  |         |   |         |  |         |       |            |               |
|  |         |   |         |  |         |       |            -- From Batt    |
|  |         |   |  Engine |  |  Main   |       |  Starter   --              |
|  | Flasher |   |  Feed   |  |  Feed   |       |  Relay     |               |
|  |         |   |  Relay  |  |  Relay  |       |            -- To Starter   |
|  |         |   |         |  |         |       |            --              |
|  |         |   |         |  |         |       |            |               |
|   ---------     ---------    ---------         ------------               |
|     |   |         |    |       |    |                                     |
|                                                                             |
|     Terminals pointing to back of bike                                      |
-------------------------------------------------------------------------------
```

Main Feed Relay:

Here is the existing layout:

```
     ------        ------        ------- Batt +
    |      |      |      |      |
 -------   |   -------   |   -------
|       |  |  |       |  |  |       |
|       |  |  |       |  |  |       |
|  F1   |  |  |  F2   |  |  |  F3   |
|       |  |  |       |  |  |       |
|       |  |  |       |  |  |       |
|       |  |  |       |  |  |       |      '4C'
 -------   |   -------   |   -------      -------
    |      |      |      |      |    R   |       |
 Batt +    |      |      |       --------|       |------ RBk To Switch
           |      |      |               |       |
           |      |      |           GBk |       |
           |      |       ---------------|       |------ GBk Main Feed
           |      |                      |       |
           |      |                  Bn  |       |
           |       ----------------------|       |------ Bn From Switch
           |                             |       |   |
           |                         Or  |       |   |-- R Coils
            -----------------------------|       |_  |
                                         |       | | |-- Bn Regulator
                                          -------  |
                                                    -----P Fan switch
```

And the new layout:

```
     ------        ------        ------- Batt +
    |      |      |      |      |
 -------   |   -------   |   -------
|       |  |  |       |  |  |       |
|       |  |  |       |  |  |       |
|  F1   |  |  |  F2   |  |  |  F3   |
|       |  |  |       |  |  |       |
|       |  |  |       |  |  |       |
|       |  |  |       |  |  |       |      '4C'
 -------   |   -------   |   -------      -------
    |      |      |      |      |    R   |       |
 Batt +    |      |      |       --------|       |------ RBk To Switch
           |      |      |               |       |
           |      |      |           GBk |       |
           |      |       ---------------|       |------ GBk Main Feed
           |      |                      |       |
           |      |     Bn           Bn  |       |
           |       ----------    --------|       |------ Bn From Switch
           |                  |  |       |       |   |
           |                  |  |    Or |       |   |-- R Coils
            -----------------------------|       |_  |
                               |  |       |       | | |-- Bn Regulator
                               |  |        -------  |
                               |  |                 -----P Fan switch
                 ---------    |  |
                |         |  |  |
B+ (starter   --| A    B1 |--   |
    relay)      |         |     |
                |      B2 |--   |  spare terminal may be used later
                | Cb   Ca |     |  for lighting feed
                 ---------      |
                 |      |       |
Earth post ------        -------
```

And here are the steps I followed.

1: Mount the main feed relay

2: Add wire from B+ (from battery side of starter relay) to relay A terminal. I used 6 sq mm tinned wires with soldered connectors, and heat shrink over the joints. Spade connectors are required for the new relay terminals, and a 6 mm eye connector for the starter relay terminal.
3: Cut the long black wire from Digiplex to the battery negative terminal and terminate both ends to the new earth post.
4: run wire from earth post to relay Cb terminal.
5: Cut brown wire between F2 and 4C, about 50 mm from 4C.
6: Re-route brown wire from F2 to relay B1 terminal, using spade terminal at relay.
7: Splice and heat shrink a wire from the stub of the brown wire connected to connect this to the relay Ca terminal.

I used 6 sq mm tinned copper wire for all of the high current wiring, and 3 sq mm wire for the low current paths (relay coils, etc).

Step 3 is really only an aesthetic step, but if you continue with the engine feed relay steps below, I'd recommend it. If you don't do it, the wire from Cb (step 4) can simply go to a convenient frame point.

This mod improved things greatly! Better starting, lights, no more over-charging. I'd recommend it highly.

Engine Feed Relay:

In standard trim, the coils are fed via the red wire at the 4C connector, the pump directly from the GBk main circuit, and the Digiplex from the run switch. I intercepted the wire from the run switch to the Digiplex, using the run switch signal to control the engine relay. Here's a diagram:

```
Old:
---

From run switch (red) -------------------------> Digiplex
      main feed (G)   -------------------------> Pump
             4C (red) -------------------------> Coils

New:
---

                                ---------
               ------          |         |
B+ (starter --| FUSE |--------| A    B1 |------> Coils, Pump
    relay)     ------          |         |
                               |      B2 |------> Digiplex
                               | Cb   Ca |
                                ---------
                                |       |
Earth post --------------------         |
                                        |
From run switch -----------------------
```

The fuse holder is an in-line 3AG item (sorry I don't know the metric or DIN name for the size). Important: do not get the type which has spring loaded connections which simply push against the end of the fuse. The type I used has solder terminals which push over the metal ends of the fuse, the whole lot then being fitted into a plastic body. It's made by Utilux, but your local auto electrician will be able to provide something suitable.

Regarding fuses, do not use domestic fast-blow items, as they don't withstand mechanical vibration well; use either ceramic cartridge fuses or slow-blow glass fuses (the kind with the internal spring).

You could also use the spare spot in the existing fuse holder, but I was unable to readily find the bits required.

Here are the installation steps:

1: Mount the relay.
2: Wire in-line 20A fuse from B+ (from battery side of starter relay) to relay A terminal.
3: run wire from earth post to relay Cb terminal.

4: Cut the red wire feeding the Digiplex (pin 6 of the digiplex connector). I did this inside the rubber 'boot' of the connector, but in hindsight may have been better off intercepting the wire in the loom between the digiplex and the coils. There's not much space in that rubber boot!
5: Splice and heat shrink a wire from the stub of the red wire (digiplex side) and connect this to the relay B terminal.
6: Splice and heat shrink a wire from the stub of the red wire (switch side) and connect this to the relay Ca terminal.
7: Cut the red wire from the 4C connector which feeds the coils (front side of 4C connector). Insulate the stub on the connector side with heat shrink.
8: Terminate the wire from the stub of the red wire going to the coils with a male spade connector; connect this to the other B terminal on the relay with a wire with a female spade connector on both ends; this whole wire should be covered with heat shrink to ensure it cannot be chaffed through.
9: By closely examining the main wiring loom on the right hand side of the bike, at the point where the loom to the coils joins it, find the red coil wire. It actually runs forward from this junction where it is soldered to the wire from the coil loom, which is also running forward at this point. Tugging on the red wire at the 4C connector (after removing all of the cable ties) may reveal the wire, otherwise use a DVM and a sewing needle to pierce each red wire and find out which one it it.
Withdraw the soldered joint from the loom and unwrap the insulation tape from around it. Solder a female spade connector to it and heat shrink the whole thing. The pump +ve line can now be disconnected from its green wire and connected to the new terminal.

In hindsight, I'm not convinced that this mod has gained me very much. The coil and digiplex supply voltage is a bit higher, and the pump no longer 'modulates' the tail lights. Your choice!

Lighting Relays:

The two light relays (one for each beam) mounted nicely under the two small screws which mount the foam rubber block which sits above the instrument panel. They need to be mounted with the mounting flange on top to allow clearance for the front fairing.

I replaced the bulb connector, as the old one was badly corroded; to it I soldered and glued three heavy wires, per the following, viewed from the back. These wires only need to to be long enough to get to the relays.

```
        -------- top: main beam +
       |        |
       |        |

left: return     right: high beam +
```

Next we need a lighting 'feed' from the electric tray under the seat. A second inline fuse (20A) is connected to the main relay B2 terminal, and a heavy wire run along the main loom to where the relays are mounted. This wire should be completely covered in heat shrink to prevent chaffing.

An alternative is to use the B connectors on the main relay for the B+ input and the lighting feed, such that the latter is no longer switched via the main relay; the A connector is now used as the main feed. This change means that the lighting feed is always active, which I've taken advantage of by mounting a power socket on the metal panel below the instruments for plugging in a charger or other accessories. I've also mounted a digital voltmeter here (from my junk collection) so I can monitor the state of the battery while riding.

This is how the light circuits change; 'LC' is the connector associated with the LH handlebar controls.

```
Old Circuit:
-----------
Ground (Bk)        ---------------------------> Headlight
LC Low beam (B)    ---------------------------> Bulb
LC High beam (W)   ---------------------------> Socket
                       |
                        ----------------------> Hi Beam Warn Light


New Circuit:
-----------
                        ----------------------> Accessory socket
                       |
                       |      ---------
               ------  |     |         |
L+ (main  ---| FUSE |---------| B1    A |------> Main Beam
    relay      ------         |         |
     B2)                -----| B2      |
                       |     | Cb   Ca |
                       |      ---------
                       |      |       |
                 --------------        |
                |      |               |
LC Low Beam ---------------------------
                |      |
                |      |      ---------
                |      |     |         |
                |       -----| A    B1 |------> High Beam
                |            |         |
                |            |      B2 |------> Optional Driving light
                |            | Cb   Ca |
                |             ---------
                |              |       |
                 --------------        |
                |                      |
LC High Beam ---------------------------
                |      |
                |       ----------------------> Hi Beam Warn Light
                |
                |
                 ------------------
                                    |
Ground (from big chassis lug) -----x-----------> Bulb socket return
```

'x' indicates an inline connector, allowing the headlight to be removed without removing the bulb connector or the earth wire from the bike.

I won't go into a step by step description of the steps required, as it's pretty obvious. I used 6 sq mm cable for the high current paths and covered the feed wire from under the seat with heatshrink to protect against chaffing. I also had to extend the 2 wires from the switch to reach the relays.

These changes led to a subtle, but quite visible, improvement in the lighting. Recommended for night riders!

Earth/Starter Cable Upgrades

I replaced the earth and starter leads with 6GA cables, which have made a noticeable difference to the bike starting. I'd recommend this to anyone with high comp pistons, or in cold climates where starting can be a problem. The terminals should be soldered unless a professional barrel crimper is available.

During the installation it was noticed that connection to the earth points on the frame was via the bolt head only, as there was paint on the frame surface in contact with the lugs; I would recommend removing the paint with a file or sand-paper and using conductive grease on the lugs.

Regulator/Charging circuits

A lot has been written on the web about the tendency of the Paso’s to overcharge the battery, in general concluding that replacing the regulator with an Electrex or Honda unit is the best option. I have no experience with the standard regulator but feel that the main feed modification could actually salvage a number of overcharging regulators. My 906 had an Electrex regulator fitted, and it also overcharged, as it sensed at the ignition control point, not at the regulator's output; fitting the main feed relay solved the problem!

The Electrex has the advantage over the Honda units of preserving the charging light, but has the disadvantage of having only a 2-phase rectifier, where the standard and Honda units fully utilize the 3-phase output of the alternator. The alternator should be able to produce about 20% more output when used in 3-phase mode, which will also reduce the wiring losses significantly.

The Electrex unit functions as a shunt regulator, dumping excess alternator output to ground when the battery voltage is high. Given that the alternator can produce 300 watts (2-phase) and that under normal running only about 120 watts are actually required to run the bike, and assuming 50% alternator efficiency, this is an over half a horsepower being thrown away!

I have a Honda unit, and will fit it should the Electrex fail, or if I find I need more output when a driving light is fitted. This is also a shunt regulator, and being 3-phase will actually waste more power than the Electrex.

I'm currently looking for a 3-phase series regulator with charging light output. A series regulator is slightly less efficient at high charging currents, but can be significantly more efficient at low currents, i.e. during extended running. I'll update this section if I find something suitable.

Conclusions

The net result of the changes I've made are quite dramatic: better starting, running, charging and lights: well worth the few hours’ work it took.